Technical Tips

Note: This is a summary of the key differences between CUES and other products. Please refer to the Dealer Manual, Compatibility Charts, Line Up Chart, and Exploded Views for full details.

General

Quickly check speeds compatibility on rear derailleur and right shift lever

All CUES rear derailleurs and right shift levers have a speed indicator logo printed on them for easy identification.

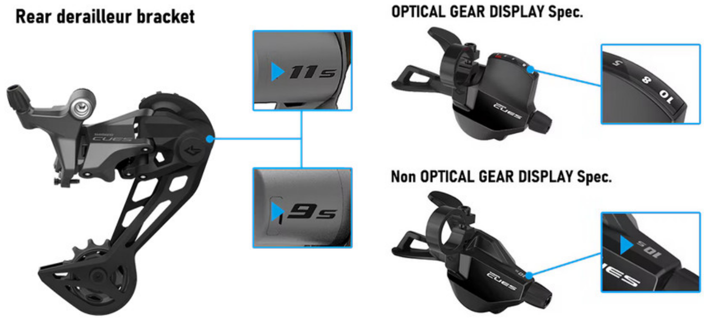

LINKGLIDE systems are not compatible with conventional HYPERGLIDE systems with the same number of speeds because the actuation ratio between shifters and rear derailleurs is different.

9,10,11-speed rear drivetrain compatibility

HYPERGLIDE MTB 9-speed	9-speed	9-speed	9-speed	HG 9-speed	9-speed 10-speed 11-speed
HYPERGLIDE MTB 10-speed	MTB 10-speed	MTB 10-speed	10-speed	HG-X 10-speed	
HYPERGLIDE MTB 11-speed	MTB 11-speed	MTB 11-speed	11-speed	LINKGLIDE, HG 11-speed	

LINKGLIDE 9-speed	LINKGLIDE 9-speed	LINKGLIDE 9-speed	LINKGLIDE 9-speed	LINKGLIDE, HG 11-speed	refer to C-649 FREEHUB compatibility (C-649)
LINKGLIDE 10-speed	LINKGLIDE 10-speed	LINKGLIDE 10-speed	LINKGLIDE 10-speed		
LINKGLIDE 11-speed	LINKGLIDE 11-speed	LINKGLIDE 11-speed	LINKGLIDE 11-speed		

refer to C-649

11T and 13T sprockets are cross compatible across all cassette models, and these sprockets are available as aftermarket replacements to simplify service inventory.

Note: CS-LG300 doesn’ t have specific replacement sprockets and requires using compatible sprockets from other LINKGLIDE cassettes.

Cassette
CS-LG700-11
CS-LG400-11 CS-LG400-10 CS-LG400-9
CS-LG300-10 CS-LG300-9

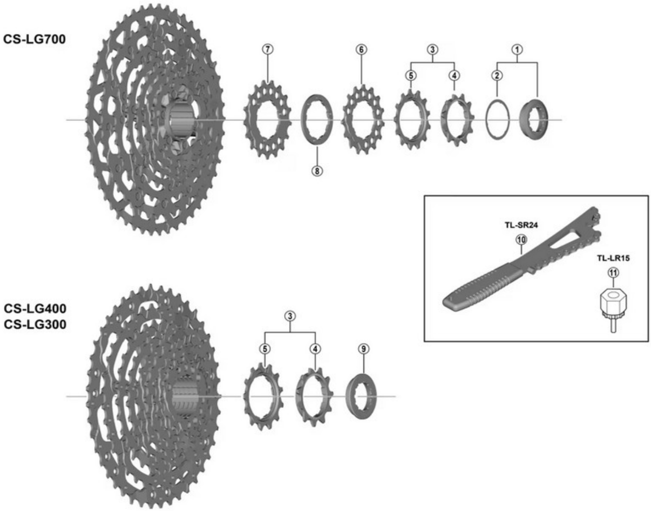

• **Sprocket teeth combination**

CS-LG700-11, LG400-11 (11-45T): 11-13-15-17-20-23-26-30-34-39-45T
CS-LG700-11, LG400-11 (11-50T): 11-13-15-17-20-23-26-30-36-43-50T
CS-LG400-10, LG300-10 (11-39T): 11-13-15-17-20-23-26-30-34-39T
CS-LG400-10 (11-43T): 11-13-15-17-20-23-26-30-36-43T
CS-LG400-10, LG300-10 (11-48T): 11-13-15-17-20-23-28-34-41-48T
CS-LG400-9, LG300-9 (11-36T): 11-13-15-17-20-23-26-30-36T
CS-LG400-9, LG300-9 (11-41T): 11-13-15-17-20-23-28-34-41T
CS-LG400-9, LG300-9 (11-46T): 11-13-15-17-20-23-28-36-46T

ITEM NO.	SHIMANO CODE NO.	DESCRIPTION	INTERCHANGE-ABILITY CS-LG700	CS-LG600	CS-LG400	CS-LG300
1	**Y0RF98010**	Lock ring and washer	A	B	B	B
2	**Y10Z04000**	Lock ring washer	A	A	B	B
3	**Y0RF98020**	Sprocket 11T and 13T for CS-LG700	A	B	B	B
	Y0RG98020	Sprocket 11T and 13T (used for CS-LG400)	B	B	A	B
4	**Y0RF9801T**	Sprocket 11T (built in spacer type) for CS-LG700	A	B	B	B
	Y0RG9801T	Sprocket 11T (built in spacer type) used for CS-LG400	B	B	A	B
5	**Y0RF9802T**	Sprocket 13T (built in spacer type) for CS-LG700	A	B	B	B
	Y0RG9802T	Sprocket 13T (built in spacer type) used for CS-LG400	B	B	A	B

Rear Derailleur

Chain sizing

Check the length of the chain.

With the zero point of the chain established on the rear of the largest sprocket, the proper final chain length is determined by adding a certain amount of links to this resulting chain length. The amount of links is dependent on the type of bike. See the figures.

■Front single / Hardtail bike / QUICK-LINK

Related models : RD-U8000, RD-U6000, RD-U4000

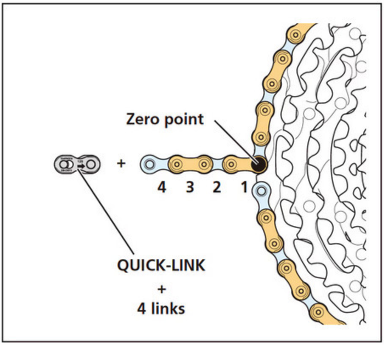

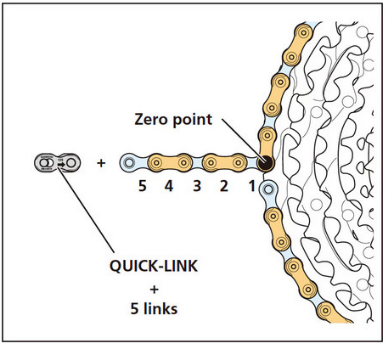

■Front double / Hardtail bike / QUICK-LINK

Related models : RD-U8020, RD-U6020, RD-U4020, RD-U3020

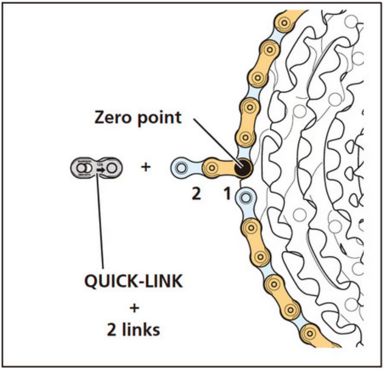

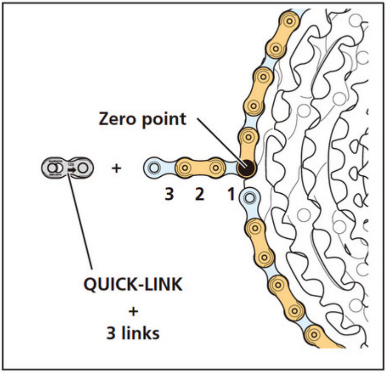

■Summary of chain length

Rear Derailleur		Connect with		
		QUICK-LINK		Connect pin
RD-U8000 RD-U6000 RD-U4000	Front single	Hardtail bike	4 to 5 links + QUICK-LINK	5 to 6 links
		Full suspension bike *1	5 to 6 links + QUICK-LINK	6 to 7 links
RD-U8020 RD-U6020 RD-U4020 RD-U3020	Front double	Hardtail bike	2 to 3 links + QUICK-LINK	3 to 4 links
		Full suspension bike *1	4 to 5 links + QUICK-LINK	5 to 6 links

*1 Check the length of the chain with the suspension in its fully extended position.

Setting distance between sprocket and guide pulley

■Front single

Adjust the B-screw.

Align the line on the inner side of the outer plate with the tip of the highest tooth on the largest sprocket.

Related models : RD-U8000, RD-U6000, RD-U4000

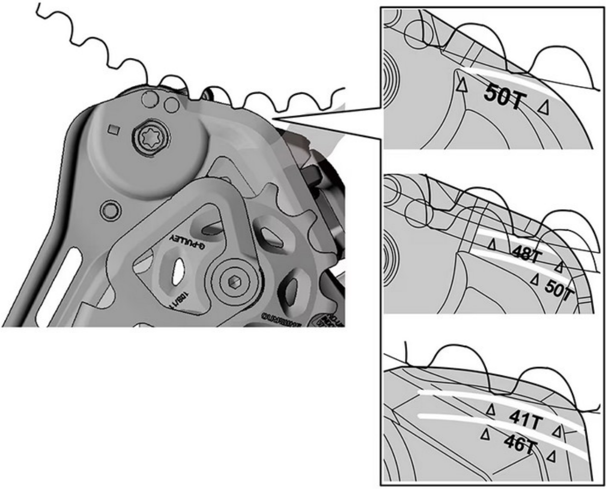

Make sure that there is a 19 mm or 24 mm gap between the tip of the guide pulley and the tip of the largest sprocket.

Related models : RD-U8020, RD-U6020, RD-U4020, RD-U3020 (When used with a single chainring)

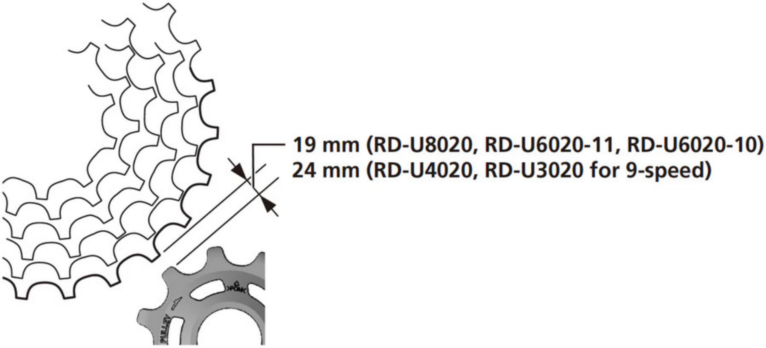
19 mm (RD-U8020, RD-U6020-11, RD-U6020-10)
24 mm (RD-U4020, RD-U3020 for 9-speed)
PULLEY

■Front double

Make sure that there is a 9 mm gap between the tip of the guide pulley and the tip of the largest sprocket.

Related models : RD-U8020, RD-U6020, RD-U4020, RD-U3020

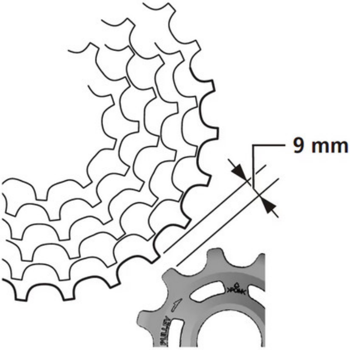

TL-RD200 can be used as a guide to set the distance.

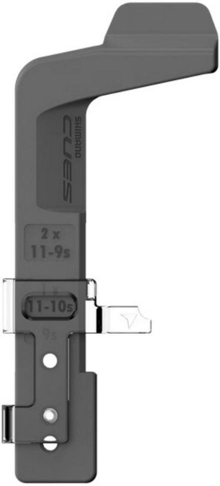

Note : interference between 11-speed rear derailleurs and spokes

Cautions regarding LINKGLIDE 11-speed specifications

When using 11-speed specification LINKGLIDE, interference may occur with the rear derailleur and spokes. Check dimensions beforehand, and check that points D and E do not interfere with the spokes or other parts.

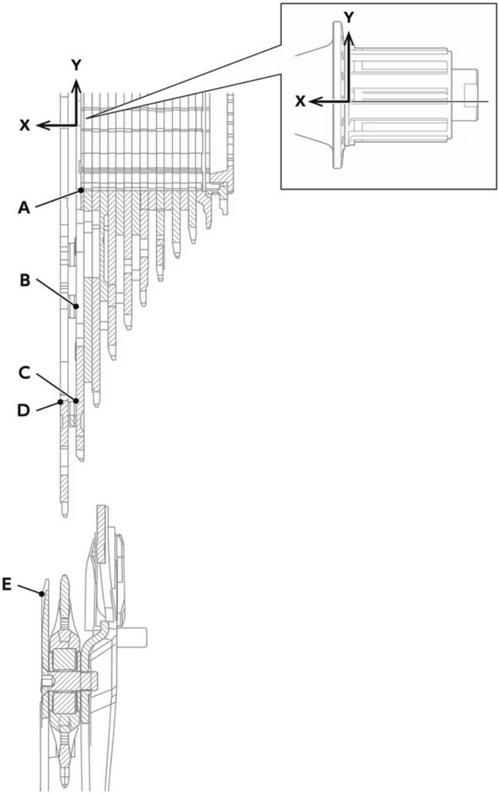

Model No.		A	B	C	D	E
CS-LG700-11 (11-45T)	X mm	0	1.2	1.2	5.8	10
	Y mm	-19.3	-52.5	-62	-62	-104.4
CS-LG700-11 (11-50T)	X mm	0	1.2	1.2	5.85	10
	Y mm	-19.3	-51	-70	-70	-124
CS-LG400-11 (11-45T)	X mm	0	1.2	1.2	5.5	10
	Y mm	-16.25	-51.5	-62	-62	-104.4
CS-LG400-11 (11-50T)	X mm	0	1.2	1.2	5.5	10
	Y mm	-16.25	-42.3	-71	-71	-124

Rear derailleur pulley compatibility chart

Guide and Tension pulley set (guide / tension)	9-speed	-	-	✓	-	-	-	✓	✓
	10-speed	-	✓	-	-	-	✓	-	-
	11-speed	✓	✓	-	✓	✓	-	-	-
	Model No.	RD-U8000	RD-U6000	RD-U4000	RD-U8020	RD-U6020-11	RD-U6020-10	RD-U4020	RD-U3020
Y3JD98080 (13/13T)		A	B	B	-	-	-	-	-
Y3JE98010 (11/13T)		-	-	-	A	B	B	-	-
Y3JF98010 (13/13T)		B	A	A	-	-	-	-	-
Y3JK98010 (11/11T)		-	-	-	-	-	-	A	A

A: Same parts

B: Parts are usable, but differ in materials, appearance, finish, size, etc.

Chain / Cassette / FREEHUB

11-speed chain is compatible for 9-, 10-, and 11-speed drivetrains.

Related models : CN-LG500, CN-HG901-11, CN-HG701-11, CN-HG601-11

The sprocket spacing is the same between 9-, 10-, and 11-speed CUES cassettes.

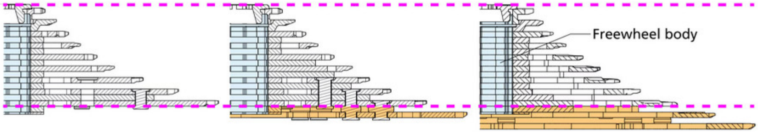

9-speed (smallest to largest)

10-speed (smallest to 2nd)

11-speed (smallest to 3rd)

Note : LINKGLIDE 11-speed cassettes are not compatible with some FREEHUBs. LINKGLIDE 11-speed cassettes may cause the rear derailleur to interfere with the spokes on some wheels.

LINKGLIDE cassette sprockets are not compatible with MICRO SPLINE FREEHUB.

Freewheel body type	FREEHUB spec.	Model No.	CS-LG700-11 CS-LG600-11 CS-LG400-11	CS-LG600-10 CS-LG400-10 CS-LG300-10	CS-LG400-9 CS-LG300-9
	O.L.D. 148 mm, E-THRU type	FH-M8010-B	✓	✓	✓
		FH-M6010-B			
		FH-TC600-HM-B			
		FH-TC500-HM-B			
		FH-MT400-B			
	O.L.D. 141 mm, Quick release type	FH-MT200-B			
	O.L.D. 150 mm, E-THRU type	FH-M825	✓	✓	✓
	O.L.D. 135 mm, E-THRU type	FH-M820	- *2	✓	✓

HG spline M (10/9/8-speed, MTB 11-speed)	O.L.D. 142 mm, E-THRU type	FH-M8010	- *2	✓	✓
		FH-M6010			
		FH-MT400			
		FH-TC500-HM	✓	✓	✓
	O.L.D. 135 mm, Quick release type	FH-M9000	- *2	✓	✓
		FH-M8000			
		FH-M6000			
		FH-M4050			
		FH-M3050			
		FH-RM35			
		FH-TX505-8			
		FH-M756-A			
		FH-M525			
		FH-M475			
		FH-TX506			
		FH-T610			
		FH-T3000			
		FH-TX500-8-QR			
		FH-TX500-8-NT			
		FH-QC400-HM	✓	✓	✓
		FH-QC300-HM			
	O.L.D. 130 mm, Quick release type	FH-RS300	- *2	✓	✓
HG spline L (ROAD 12/11-speed)	O.L.D. 142 mm, E-THRU type	FH-R7070	✓ *1	✓ *1	✓ *1
		FH-RS770			
		FH-RS470			
	O.L.D. 135 mm, Quick release type	FH-UR600	✓ *1	✓ *1	✓ *1
	O.L.D. 130 mm, Quick release type	FH-R7000	- *2	✓ *1	✓ *1
		FH-RS400			

*1 Need low spacer (1.85 mm.)

*2 Interference between derailleur and spokes may occur.

Crankset / Bottom Bracket

There are three types of construction for CUES crankset.

■2-piece

Related models : FC-6000-1, FC-U6000-2, FC-U6000-2B, FC-U4010-2, FC-U4010-2B

Install from left side

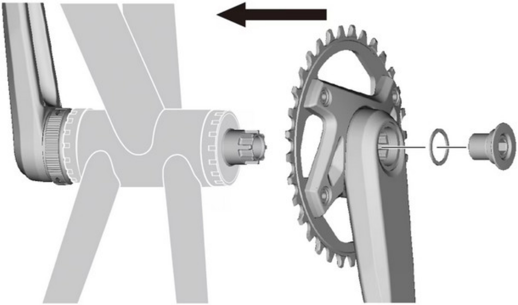

■HOLLOWTECH II

Related models : FC-U8000-1, FC-U8000-2, FC-U6010-2

Install from right side

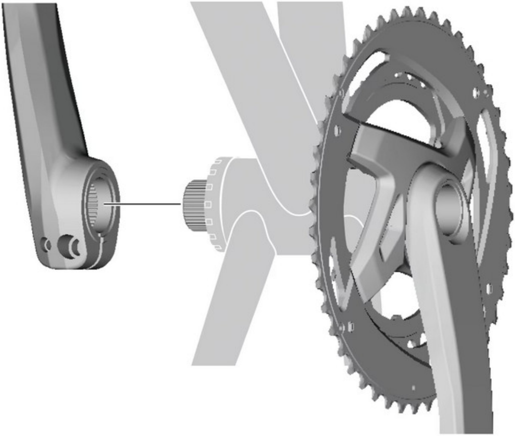

■Square type

Related models : FC-U4000-2, FC-U4000-2B, FC-U4000-1

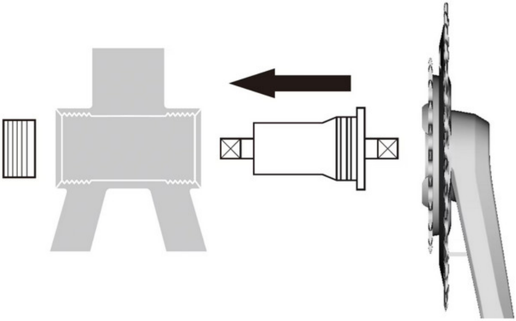

Updated bottom bracket models are designed to accommodate crank spindles being inserted from either side of the bike, as some CUES cranksets have the spindle affixed to the left crank arm.

Related models : BB-MT801, BB-MT501

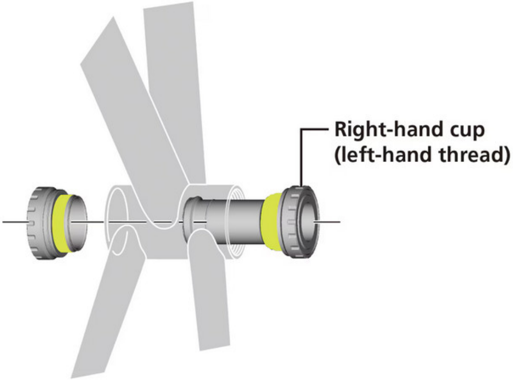

Front Derailleur

The procedure to adjust the cable tension for SIDE SWING front derailleurs is different from the other front derailleurs.

Adjust the gap between the chain and inner plate.

Set the gap to within the range shown in the table.

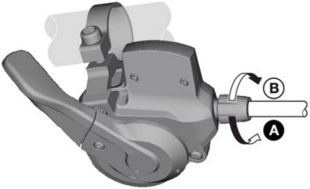

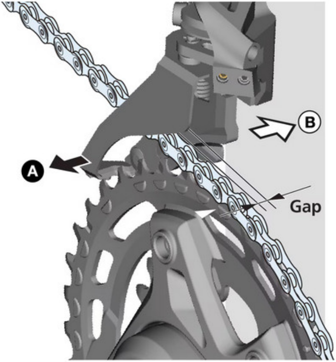

Model		Cassette	Gap
TOP SWING	FD-U8010 / FD-U6010	11-speed	0.0 - 0.5 mm
		10-speed	
	FD-U4000	10-speed	
		9-speed	
	FD-U4010	10-speed	
SIDE SWING	FD-U6000	11-speed	0.0 - 0.5 mm
		10-speed	0.5 - 1.0 mm (0.0 - 0.5 mm + 6 clicks in direction B)
	FD-U4000	10-speed	0.0 - 0.5 mm
		9-speed	0.5 - 1.0 mm (0.0 - 0.5 mm + 6 clicks in direction B)